Assembly Instructions for Kratos Deep Depth Double Stack Convection Ovens

(1)

Lift the bottom unit with a fork lift. Fasten the casters with the supplied bolts and nuts. Put down the unit on the floor and lock the casters;

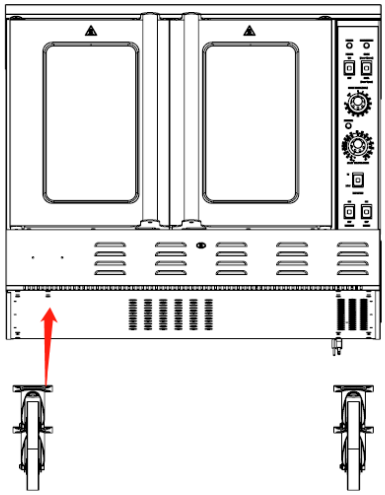

(2)

Put the stacking support on top of the bottom oven. Fasten the two screws on both sides

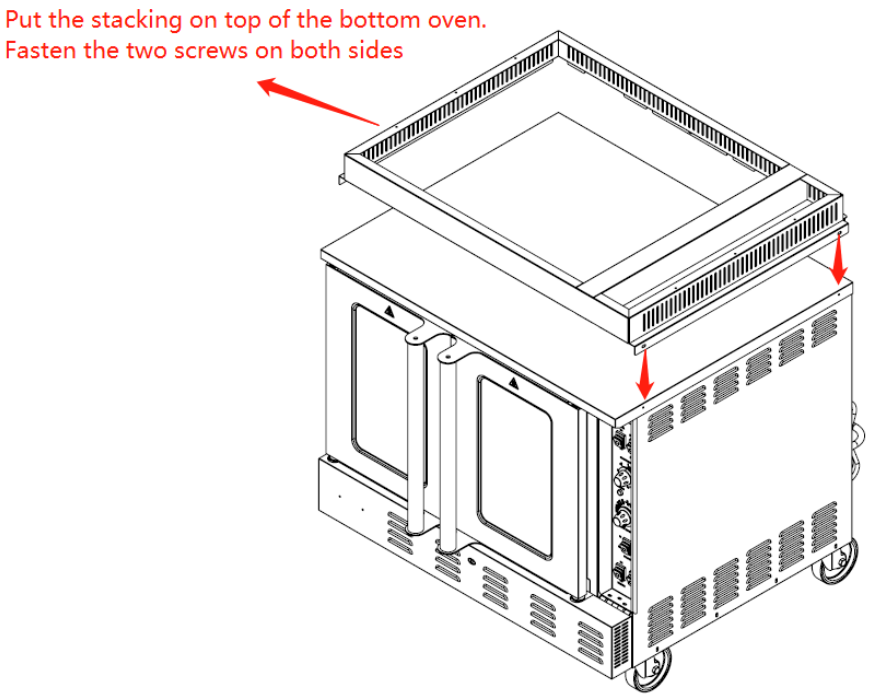

(3)

Load the top convection oven on top of the bottom unit. Take off the side panels of the top unit. Connect the top unit to the stacking support. After that, please install back the side panels.

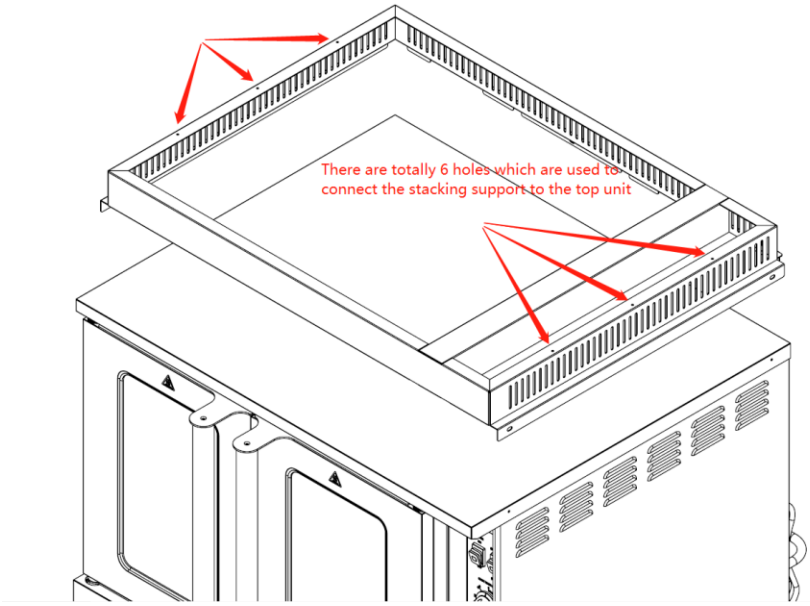

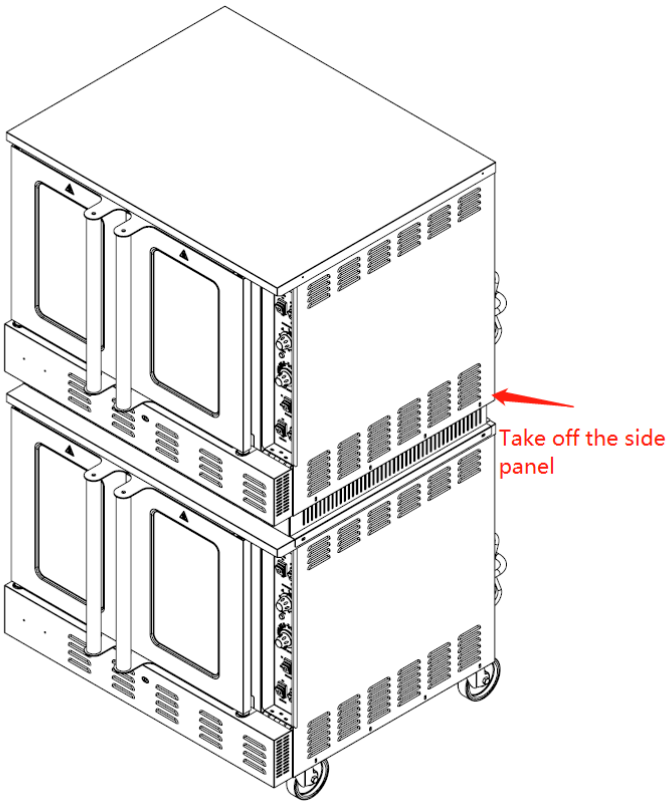

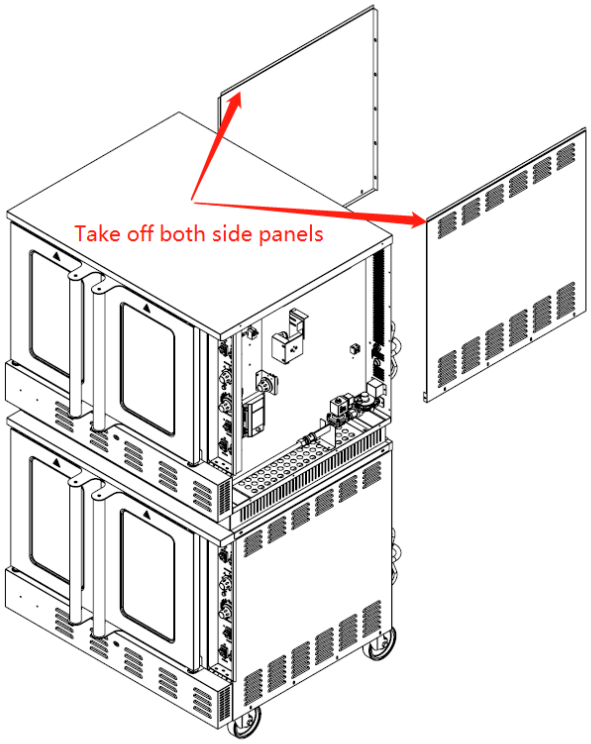
Take off both side panels

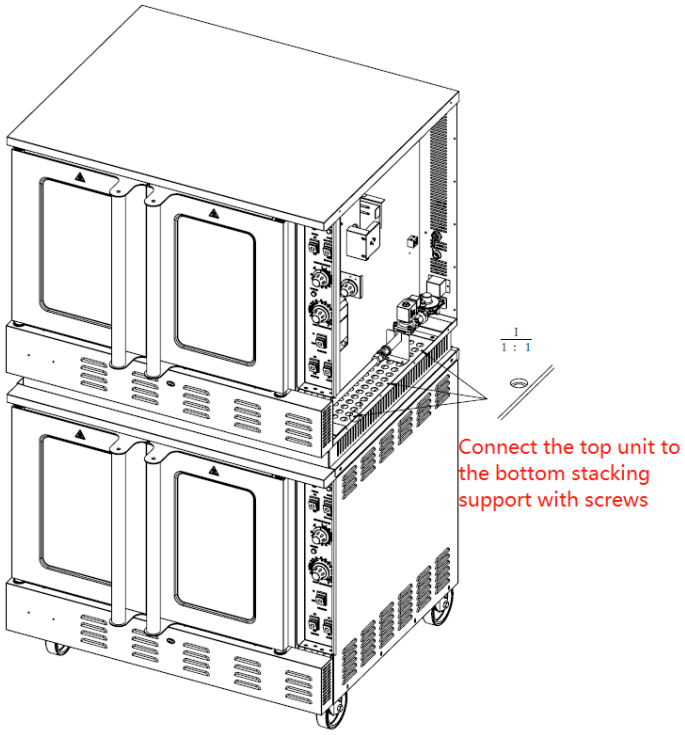
Connect the top unit to
the bottom stacking
support with screws

(4)

Install both chimneys on the back with the supplied screws

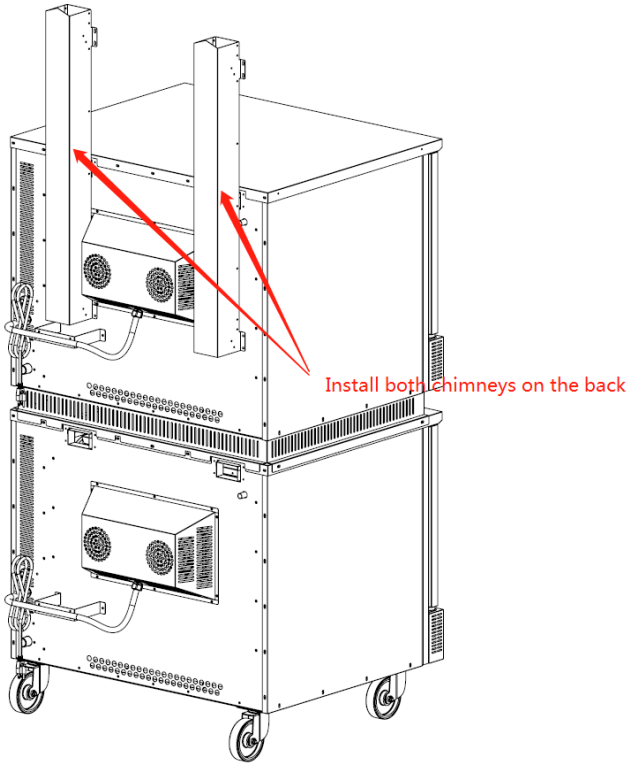

5)

After that the stacking is completed. Below is the picture how the stacking unit looks from the back

